The Selection of Guide Wheel in Wire Cut EDM

1. Material: ☐Metal ☐Ceramic ☐Sapphire
2. Shape: ☐Uniaxial ☐Biaxial
3. Dimension: Outer Diameter:_____mm; Length:_____mm

   Shaft Diameter:_____mm; Thread Size M:_____mm;

   Base Spacing:_____mm
4. Base Shape: ☐Straight Shank ☐Taper Shank

Reference Pictures

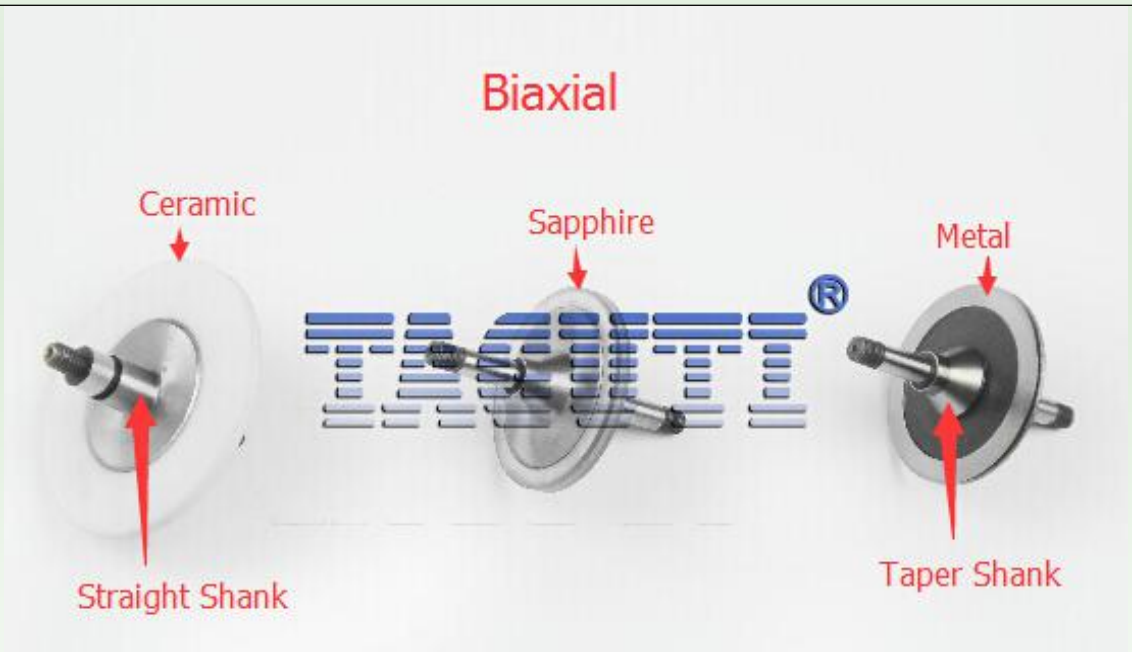

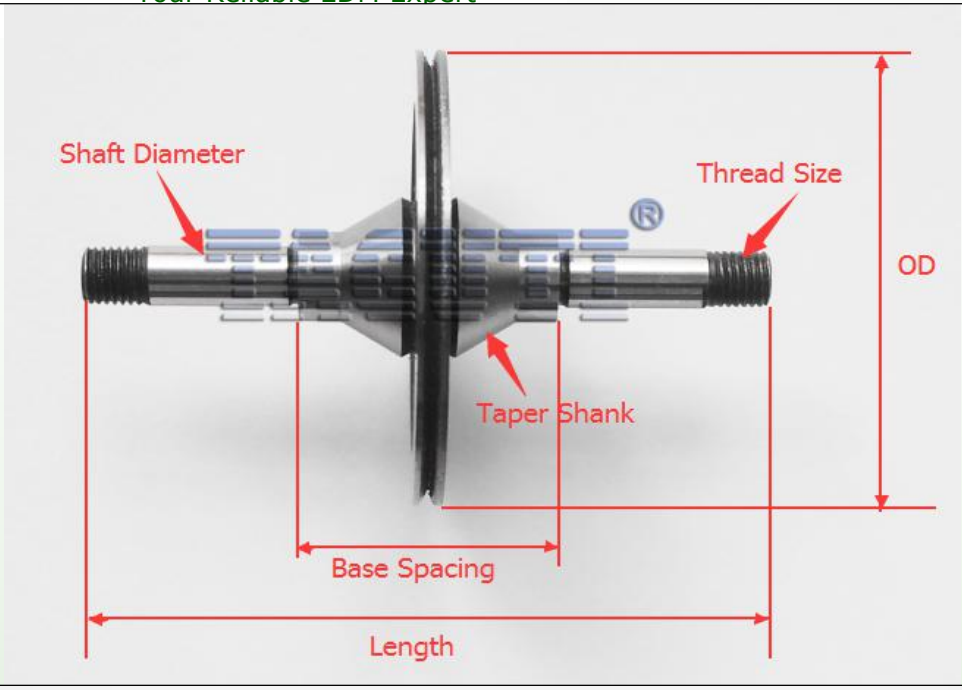
Shaft Diameter
Thread Size
OD
Taper Shank
Base Spacing
Length

Uniaxial
Ceramic
Sapphire
Metal

Shaft Diameter
Thread Size
OD
Base Spacing
Length